International Engineering Research Journal

Experimentation And Thermal Analysis Of Silencer For The Exhaust System Of The Vehicle To Reduce Exhaust Temperature.

#1Mr. Rahul R. Pagare,#2Prof. Dr. J. H. Bhangale.

Mechanical Engg. department, University of Pune, Matoshri college of Engineering and Research Centre, Eklahare, Nashik, Maharashtra, India.
Mechanical Engg. department, University of Pune, Matoshri college of Engineering and Research Centre, Eklahare, Nashik, Maharashtra, India.

Abstract:
The exhaustsystem of vehicle is exposed to high temperature as the hot gases from the combustion chamber passes through it. Higher performance of the engine can be achieved by normal operating condition which can be limited by controlling exhaust system temperature. The uniform distribution of heat is needed to enhance life of the exhaust system of component.
Automotive engines in bikes have exhaust system which is pivotal in rejecting the exhaust air, heat which increases air pollution, exhausting speed increases noise pollution, human harmful atmospheric environment which may be necessary to prevent and preserve harmful atmospheric gases. The silencer is required to control air pollution, noise pollution, to filter (Catalytic converter) the chemical toxic elements. The function of exhaust system to discharge the exhaust gases of the engines which will not affect atmospheric environment.
This study deals with an experimentation and thermal analysis of silencer of the vehicle in order to reduce the exhaust temperature. So that various polluting gases such as NOx, CO, CO_2, SO_2, PAH so on. Get reduced while discharged in to atmosphere. For that we can design the silencer with different no of holes at the front end and the rear end of the silencer and compare their results with each other and then will select the best suitable one.
Temperatures at different no of holes on the silencer are determined by experimental setup further considering the results of temperatures geometric modeling is done on the current model of silencer in ansys.
Keywords:silencer, exhaust temperature, emission, engine performance.

1. Introduction

Over recent past years, very strict legislation have been imposed on NOx, CO, particulate emissions, coming from vehicles or any petrol engine. Hence in order to meet the environment legislation, it is highly desirable to reduce NOx percentage in the exhaust gases. Predominantly, petrol engine is used to drive two wheeler, cars, some engines acting as prime mover, etc. As the use of two-wheelers is increasing drastically, the emission is also increasing vigorously. So, technology like exhaust gas recirculation must be emphasized to deal with pollution problems. When the temperature inside the combustion chamber is high enough for long time, the nitrogen and oxygen combines to form Nitrogen Oxides. Reduced cylinder temperature can be achieved by reducing the amount of oxygen in the cylinder. Exhaust Gas Recirculation technique will help to reduce the cylinder temperature. Traffic exhaust emissions are consequential sources of air pollution in the world and may damage the human health and turn out into global warming effect. Therefore, governments are compelled to minimize motor-vehicle pollution problems with more stringent emission standards for reducing pollution-related chemicals and improving air quality. In most Asian countries, motorcycles hand out air pollution more than other vehicles. Previous research shows that three-way catalytic converter used in spark ignition (SI) engines could reduce most exhaust pollution, such as HC, CO and NOx, towards achieving exhaust standards (Dattatray, et al, 2013).

However, converters are high priced to apply in motorcycles and would not reduce carbon dioxide (CO_2), a major cause of global warming effect. Internal combustion engine is an important prime mover used in the various field like automotive, power generation and industry application. Heat transfer would influencethe various parameters such as performance, emission and durability of the engine as well as the design, material choice and fatigue life of componentof vehicle. Engine heat transfer and cooling is necessary for improvement of engine performance. Measuring the exhaust gas temperature from automotive exhaust system is useful to understand the engine processes (Robert, et al, 2007).

2.Objective of the work:

1. To study exhaust gas silencer and exhaust gas emission in an two wheeler automobile engine.
2. To study the comparison of temperature for different holesi.e . 4 holes, 6 holes, 8holes, at front end and rear end of silencer experimentally and analytically (with the help of ansys software).
3. To study the temperature of original silencer (no hole at rear end and front end) with silencer at different number of holes (modified silencer).
4. To study the exhaust gas emission components at the different number of holes (modified silencer) at the front end and rear end of silencer.

3.Exhaust Emission:

Automotive exhaust is the major source constituting about 60% of the total emission. Automobile exhaust consists of wide range of pollutants from simple to carcinogenic substances such as (1) Hydrocarbons (Unburnt), (2) Carbon monoxide, (3) Oxides of nitrogen (NOx), (4) Particulate matters e.g. lead, (5) carbon,(6) sulphur dioxide, (7) peroxides, (8) Poly Aromatic Hydrocarbons (PAH) etc.

Hydrocarbons and CO appears in the exhaust gas products of incomplete combustion. Oxides of nitrogen result from the reaction of nitrogen and oxygen contained in the combustion air at high temperature prevailing during combustion. Further, many of these primary pollutants react with each other to form secondary pollutants. Chief among these includes HC, CO, NOx when mixed with atmospheric water vapours in the presence of sunlight form ozone and variety of complex organic gases and resultant particulates known as Photochemical Smog.

The major pollutants emitted from exhaust emissions of gasoline fueled vehicles are CO, HC, NOx and Pb while pollutants from diesel-fueled vehicles are particulate matter (including smoke), NOx, SO_2, PAH. The detailed information of these pollutants is as given below.

Carbon Monoxide (CO) - colourless and odourless gases slightly denser than air. Residence time and turbulence in the combustion chamber, flame temperature and excess O_2 affect CO formation. Conversion of CO to CO_2 in the atmosphere is slow and takes 2 to 5 months.

Hydrocarbon Compounds (HC) - Compounds composed of carbon and hydrogen and include another volatileorganic compounds (VOCs). Most HCs are not directly harmful to health at concentrations found in the ambient air. Through chemical reactions in the troposphere, they play an important role in forming NO_2 and O_3 which are health and environmental hazards. Among various HC, methane (CH_4) is absent from these reactions. Remaining HC, non methane hydrocarbons (NMHC) are reactive in the formation of secondary air pollutants. NMHC are photo chemically reactive.

Nitrogen oxides (NO_x) - includes nitric oxide (NO), nitrous oxide, nitrogen dioxide (NO_2), dinitrogen trioxide (NO_3) and nitrogen pent oxide (N_2O_5). NO and NO_2 collectively represented as NOX, are the main nitrogen oxides emitted by vehicles. Approximately 90% of these emissions are in the form of NO produced in the vehicle engine by combustion of nitrogen at high temperatures. NO_2 formed by oxidation of NO, has a reddish brown colour and pungent odour.In the atmosphere, NO_x involved in a series of reaction.

Sulphur dioxide (SO_2) - is a stable, non-flammable, non-explosive, colorless gas. In the atmosphere, SO_x may be converted to sulphur trioxide (SO_3) by means of reaction with O_2. SO_2 and SO_3 react with moisture in air to form sulphuric (H_2SO_4) acids may precipitate to earth as acid rain. Sulphates may also be developed by the reaction of these sulphur compounds with metals present in particulate matter(M. Nebish, etai, 2014).

Airpollution is most important from the public health of view, because every individual person breaths approximately 22000 times a day, inhaling about 15 to 22 kg of air daily. Aesthetic and physiological effects are cause by the polluted air which results into the undesirable physical ill effects. Air pollution can be defined as addition to our atmosphere of any material, which will have a dexterous effect on life upon our planet. The most important pollutantscome up with vehicles are carbon monoxide (CO), unburned hydrocarbon (UBHC), oxides of nitrogen (NOx) and Lead. Automobiles are not the only sources of air pollution, other sources such as electric power generating stations, industrial and domestic fuel consumption, refuse burning, industrial processing etc. also consist to contamination of our environment so it is imperative that serious attempts should be made to conserve of our environment from degradation. 3.1 Mechanism of CO Formation The hazardous gas CO, which has high affinity to react with the hemoglobin in the RBCs, can also slow down mental and physical activities. CO is intermediate product of combustion of carbon and oxygen (O_2). CO further combines with O_2 to form CO_2 i.e. carbon dioxide (Charlampos, et al, 2012).

$CO + ½ O_2 = CO_2 + Heat$

CO is generally formed due to the combustion of rich mixture i.e. rich in fuel. Also, even the lean mixture forms small amount of CO. CO formation also represents the loss in heat energy which reduces the break thermal efficiency of engine.

Exhaust reaction=

$$2C_8H_{18}+25O_2=16CO_2+18H_2O$$

4.Experimental setup:

In this project, silencer with different no of holes i.e. 4 holes, 6 holes, 8 holes. With diameter 5 mm. are projected at the front end of the silencer and the rear end of the silencer.

After that at specific interval of time i.e. 15 min, 30 min, and 45 min. the temperature of the front and the rear end get measured with the help of infra red thermo meter.

Theresult shows that, the silencer with 6holes gives better result than other one.

Fig.1 original experimental set upwithfront end.

Above fig 1 shows the original set up of silencer with 6 holes with 5mm diameter drilled at front end.

Fig.2. shows the experimental set up with rear end.

Fig 2 display the original set up of silencer with 6 holes at the rear end.

Fig.3.experimental setup of silencer.

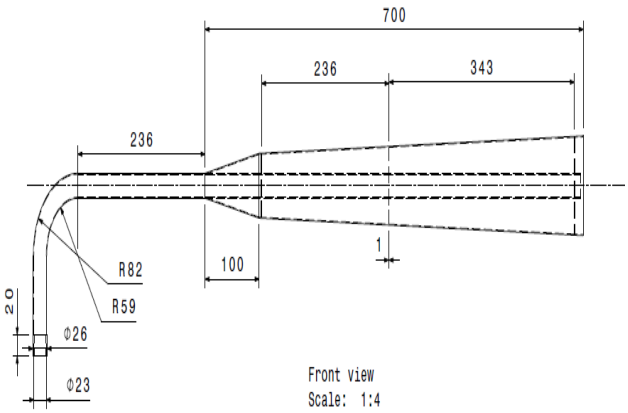

Fig.4. Shows schematic representation of original silencer.

While measuring the temperature of original silencer I figure out that the temperature of the exhaust gases coming from the engine is very high.

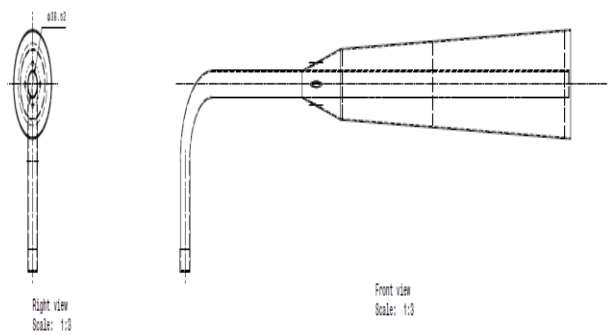

Fig.5. Shows schematic representation of 4 hole silencer.

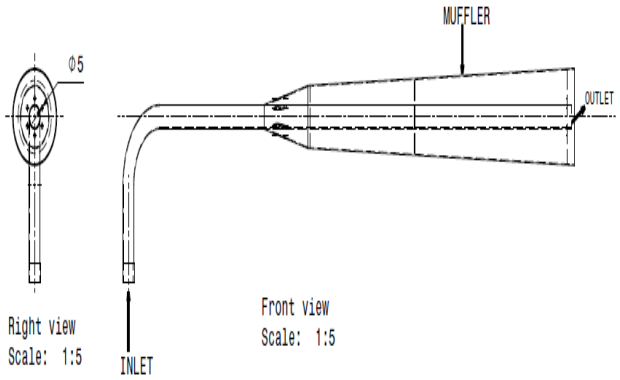

Fig.6. Shows schematic representation of 6 hole silencer.

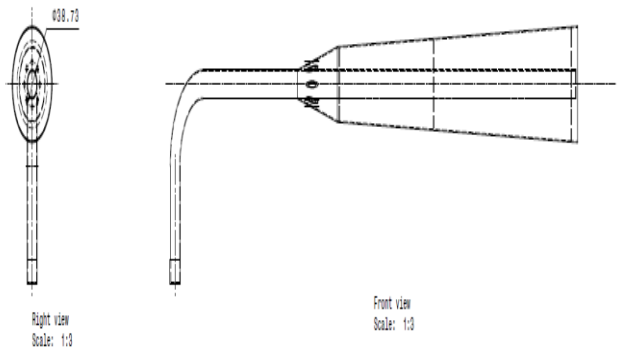

Fig.7. Shows schematic representation of 8 hole silencer.

5.Analysis Of Silencer With Ansys Software:

The Automobile silencer which reluctant to 2-Wheeler manufacturer in India with the rated HP of the engine up to at 13.5HP. The exhaust gases coming out from engine are at very high speed and temperature. Silencer has to reduce noise, vibrations. While doing so it is subjected to thermal, vibration and fatigue failures which cause cracks. So it is requisite to analyze the vibrations in the silencer in order to minimize the cracks and improving the life and efficiency of the silencer as well. This presents a computational approach for the lifetime assessment of structures. One of the main features of the work is the search for simplicity and robustness in all steps of the modeling in order to match the proposed method with industrial constraints. The proposed method is composed of mechanical finite element computation ((Dattatray, et al, 2013).

Methodology of finite element analysis of Silencer · Theresults during post-processing

Typically the following changes are being considered:

Increasing mass and damping's on silencer. Number of size of holes to be modified.

The different material properties selected for silencer as are below.

Specifications of silencer:

1. Material used: CRCA (Cold Rolled Close Annealed).
2. Material density is : 7850 kg/m3
3. Weight is: approx 19.5 to 20 kg.
4. Young's modulus of elasticity E:2^5mpa.
5. Poisons ratio: 0.3.
6. Thickness: 2 mm.
7. Length of the silencer is: 700 mm.

Boundary Condition
Inlet Temp1=250 C
Velocity=10m/S
Outlet Pressure=101325 Pa (Atm)

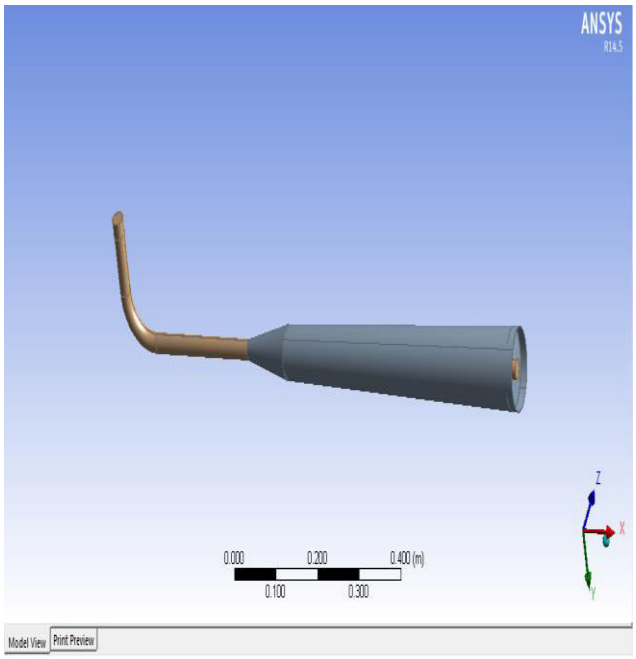

Fig.8. Original geometry.

Abovefig.8.shows the original geometry of the original silencer.

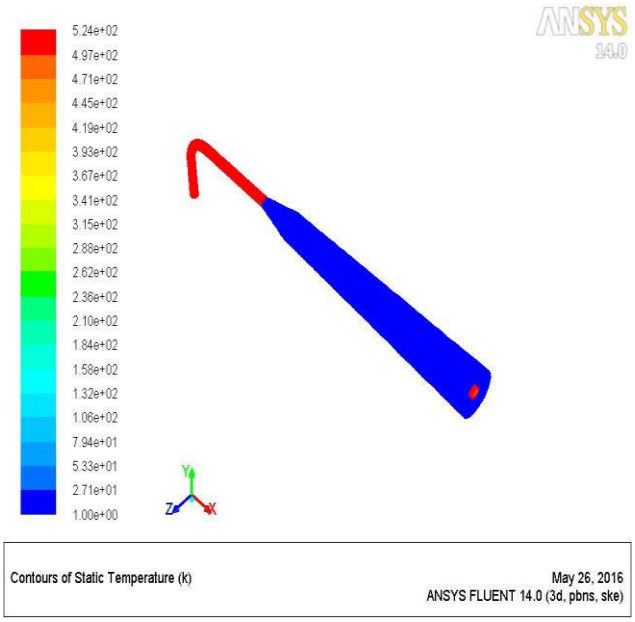

Fig.9. stress generated at the original silencer.

In the above fig as the temperature of the exhaust gases is very high so that the stresses generated at the front and the rear end is also very high as shown in fig 9.

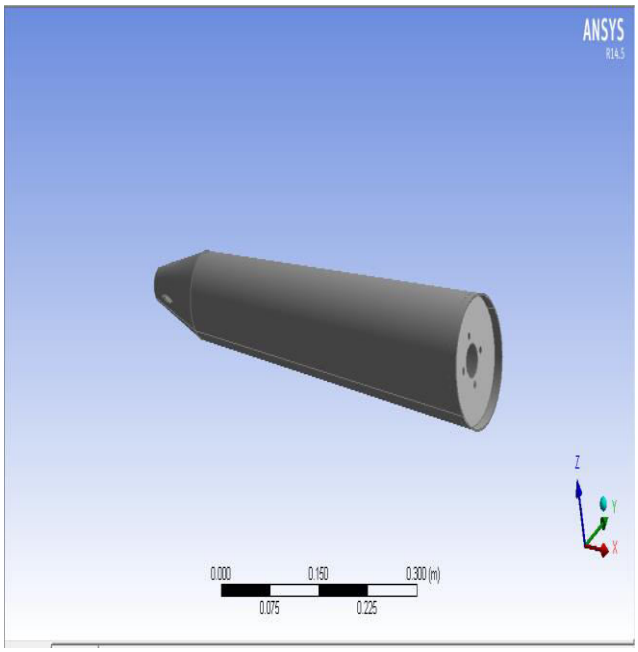

Fig.10. 4 holegeometry

The above fig.10 shows 4 hole geometry.

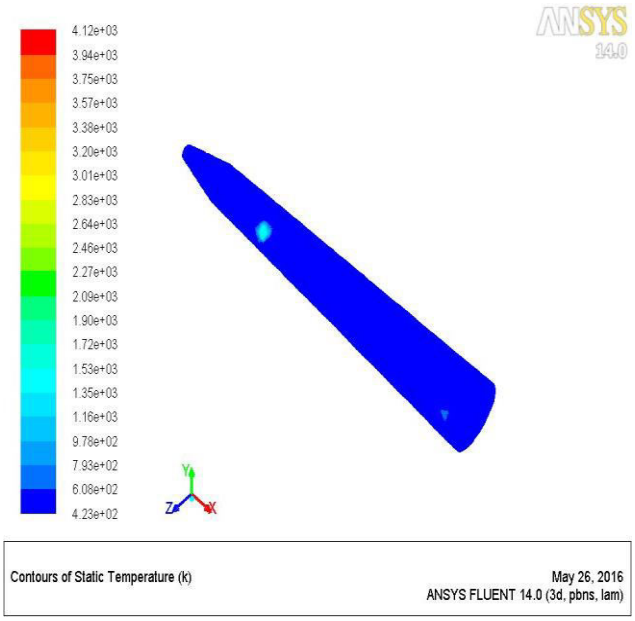

Fig.11. stress generated at the 4 hole silencer.

The above fig.11.Shows that the stress generated in the 4 hole silencer is minimum as compared to original silencer.

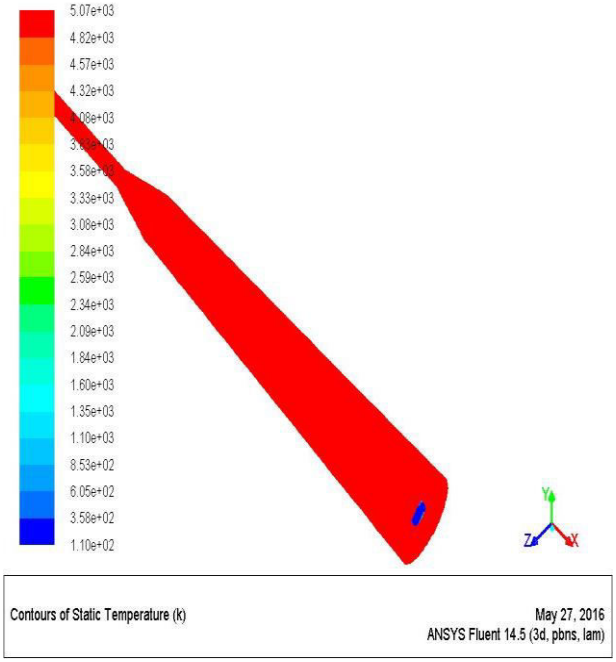

Fig.12. Stress generated at the 6 hole silencer.

This fig.12suggested that the stresses generated at the front and rear end of the 6 hole silencer is very low as compared to original and 4 hole silencer.

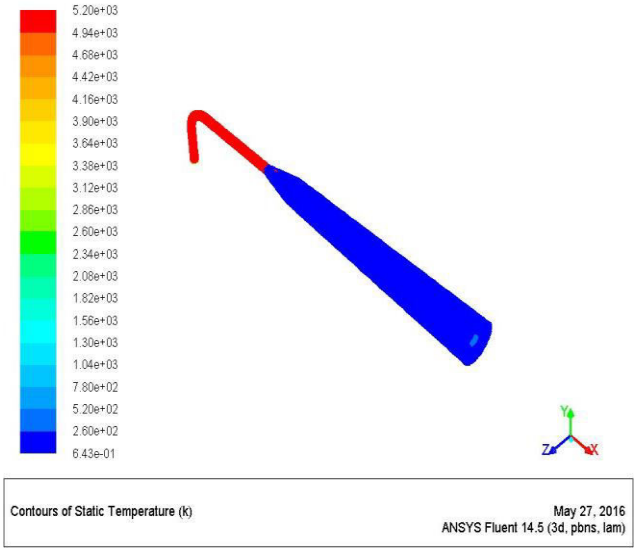

Fig.13. Stress generated at the 8 hole silencer.

Fig.13 shows that the stress generated in front and rear end of the silencer is low as compared to original silencer but quite high as compared to 6 hole silencer.

6.Results and discussion:

Silencer of Two Wheeler	Exhaust Temp(in degree)
Original model	207
4 Holes model	139
6 Holes model	85
8 Holes model	143

Table no.1. Exhaust temperature of silencer at different no of holes.

Table no.1.shows the exhaust temperature of the two wheeler silencer for original model and modified model.

Practical:
At Front end:

Silencer	Time	Original Temp	Modified Temp	% Temp Reduction
	15min	135.2	97.2	23.22%
	30min	140	105.9	21.22%
	45min	178.4	116	17.32%

Table no.2. Shows the temperature of the 6 holes model silencer at front end.

Table no.2. Shows the temperature of the 6 hole silencer at different interval of time at the front end.

At Rear end:

Silencer	Time	Original Temp	Modified Temp	% Temp Reduction
	15min	89.7	75.0	16.38%
	30min	96.1	84.2	12.38%
	45min	104.2	92.7	11.03%

Table no.3. Shows the temperature of the 6 holes model silencer at rear end.

Tableno.3. shows the temperature of the 6 hole silencer at different interval of time at the rear end.

Conclusion:

The Experimental work carried out in this study, and the conclusion made from above discussions are as follow:

1. With the help of experimental and ansys analysis result we conclude that we can get maximum temperature reduction at 6 holes so preferred to drill 6 holes at front and rear end to reduce temp of gases.
2. From practical temperature measurement at inlet of muffler % temperature reduction is about 17.32% and at outlet of silencer % temperature reduction is about 11.03% for 6 holes at rear and front end of silencer and from analytical temperature measurement at inlet of muffler % temperature reduction is about X% and at outlet of silencer % temperature reduction is about Y% for 6 holes at rear and front end of silencer.
3. In the case of first set of measurements, the reduction of exhaust gas temperature has resulted in the reduction of CO_2, CO, HC emissions except the case where the engine operated at 7500 rpm in where it has been presented a small increase of CO emissions. By taken into consideration the second set of measurements, it can be concluded that the reduction of gas temperature even in the case of using different fuel mixtures (gasoline-methanol) has as a result the reduction of emissions.

References:

Shigehisa Morinaka, KatsusukeK, (1986), "Water-Cooled Engine Cooler For Vehicle", United states Patent, Patent number4632206.

Robert Wassmur, (2007), "Method and Arrangement for Cooling an Exhaust System of a Vehicle", United state Patent, Patent number US 163246 A1.

Obodeh O., Ogbor A. D. (2009),"Improving The Performance Of Two-Stroke Motorcycle With Tuned Adjustable Exhaust Pipe", Journal of Applied sciences, engineering and technology, Vol. 1(2), 59-65.

Jayant Kumar T, Arun M, Murugan. G, Mano R. Venkatesan.J, (2010),"Modification Of Two Stroke I.C Engine To Reduce Emission And Fuel Consumption", International Journal Of Engineering And Technology, vol.2(1), February.

CharalamposArapatsakos, AnastasiosKarkanis& Stella Maria Strofylla (2012),"The Effect Of Temperature On Gas Emissions",Department of Production and Management Engineering, Democritus University of Thrace, April, vol11, issue1.

DattatrayDilipGiripunje, Vilas B. Shinde, Swapnil S. Kulkarni, (2013),"Thermal Analysis For Motor Bike Exhaust Silencer For Ensuring Reduction In Hot Spots Through Design Enhancement",International Journal of Advanced Engineering Research and Studies, vol. II/ IV, pp. 134-137, July-Sept.

MesutDurat, ZekeriyaParlak, Murat Kapsiz, Adnan Parlak(2013),"CFD And Experimental Analysis On Thermal Performance Of Exhaust System Of A Spark Ignition Engine", Journal of Thermal Science and Technology, vol. 33(2), pp. 89-99.

M. Nebish, V. Hari Ganesh (2014) "Experimental and CFD Analysis of Exhaust Gas Reduction",International Journal of Innovative Research in Science, Engineering and TechnologyVol. 3, Issue 7.

Mohsen Ghazikhani, Mohammad Hatami, DavoodDomiriGanji, MofidGorji-Bandpy, Ali Behravan, GholamrezaShahi, (2014),"ExergyRecovery From The Exhaust Cooling In Diesel Engine For BSFC Reduction Purposes", Energy vol. 65, pp. 44-51.

X. Liu, Y.D. Deng, S. Chen, W.S. Wang, Y. Xu, C.Q. Su, (2014), "A Case Study On Compatibility Of Automotive Exhaust Thermo Electric Generation System, Catalytic Converter And Muffler", case studies in thermal engineering vol.2,pp.62-66.

Mahesh S. Vasava, P. V. Jotaniya (2015)" Heat Transfer Analysis in Automotive Exhaust System using Liquid Jet Cooling",International Journal of Innovative Research in Science, Engineering and TechnologyVol. 4, Issue 6.

A.S. Mate(2017) " Thermal Analysis Of Silencer Pipe",Mechanical Engineering Department,Pillai HOC College of Engineering & Technology,Rasayani, Raigad - 410207, Maharashtra, India,Vol. 8, Issue 3.